Longbed Camper Spaceframe dimensions
Tube size: 1.5" square x 0.065" wall
(units in inches)

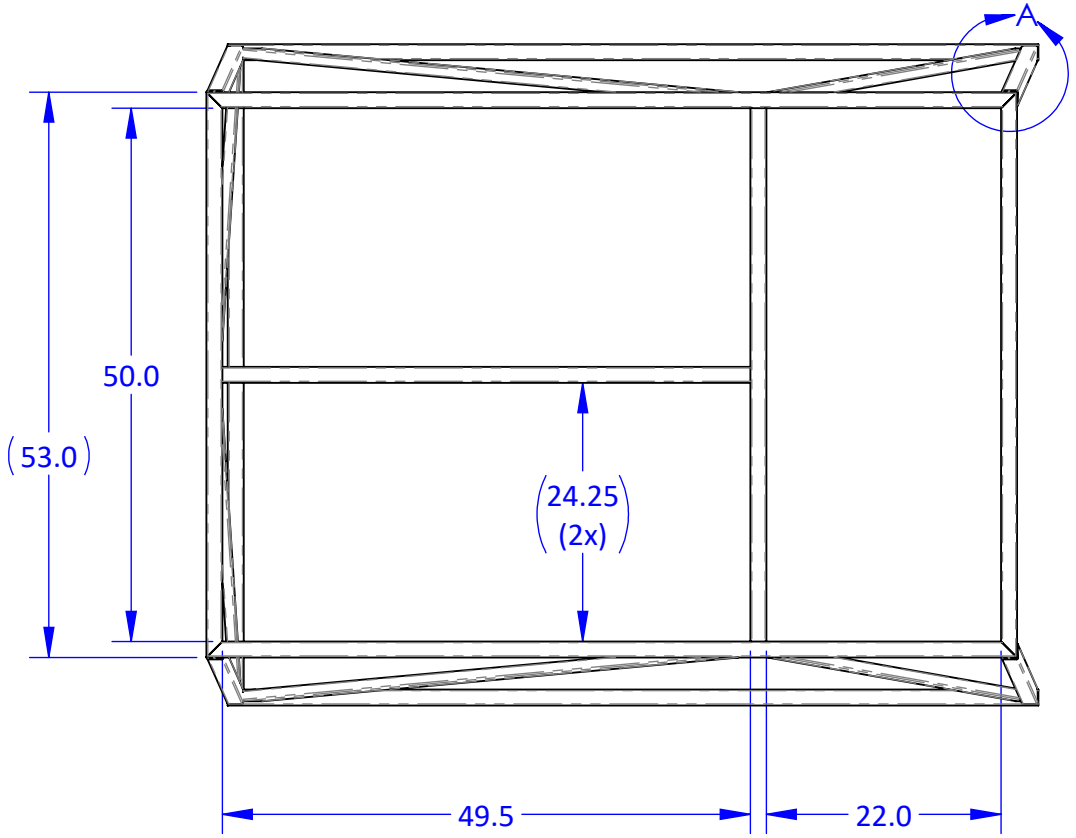

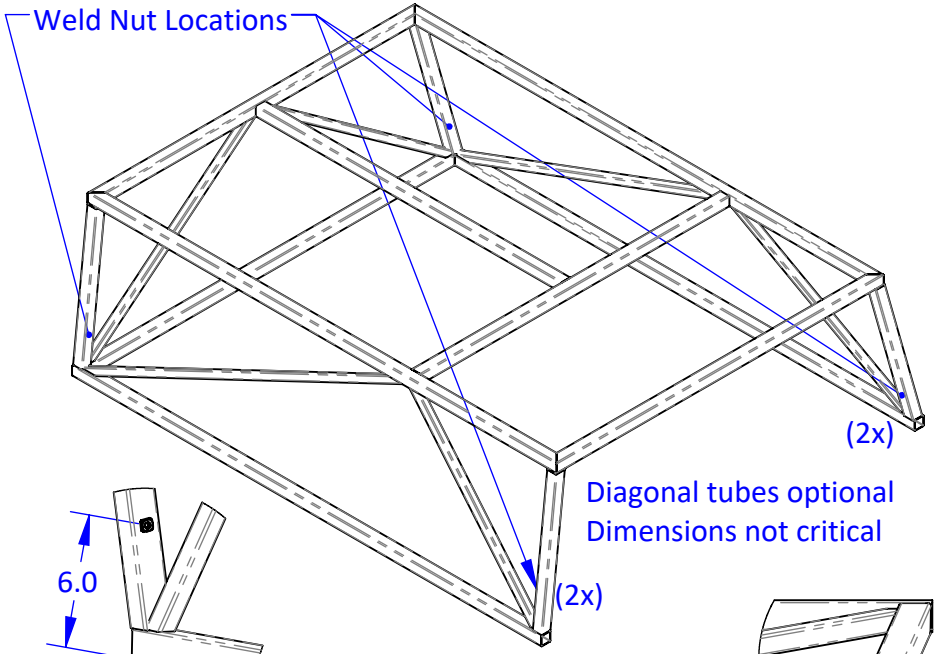

Diagonal tubes optional
Dimensions not critical

Weld Nuts to be 6" from
bottom surface.

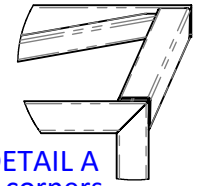

DETAIL A
Recommend miter joints on corners

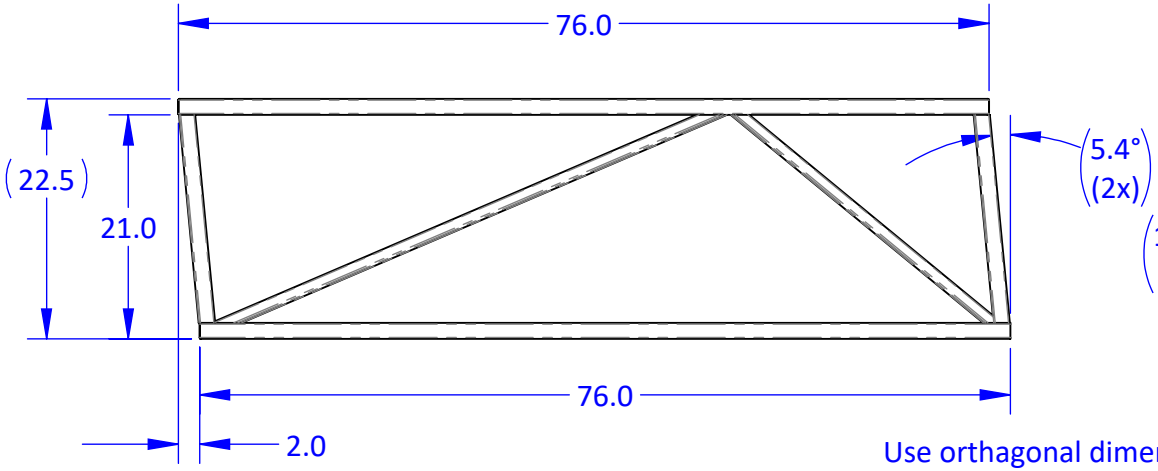

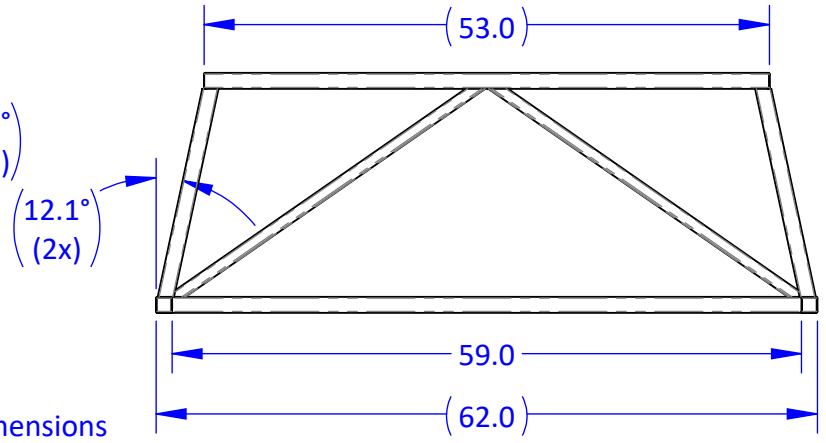

Use orthagonal dimensions
(not the angles) for best results